DocuSign Envelope ID: 980ECE15-E75D-4CEB-A9E0-2F70BBD1F7F1

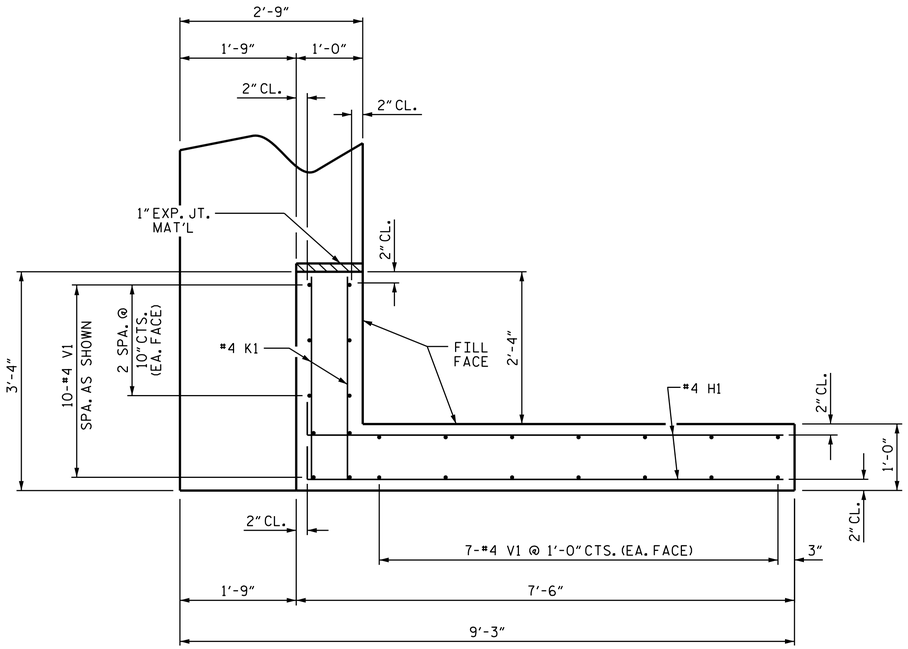

PLAN OF WING (W1)

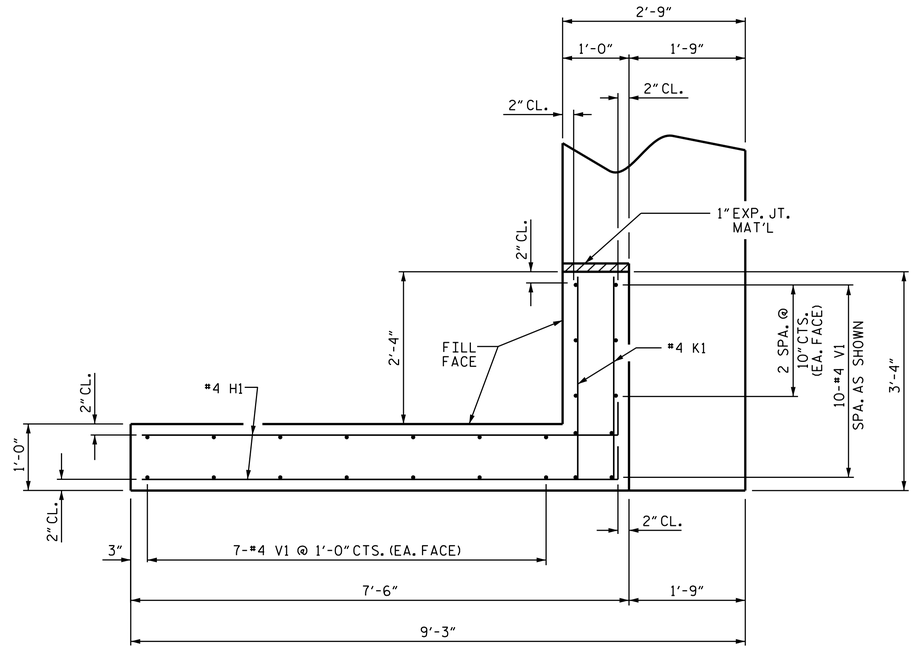

PLAN OF WING (W2)

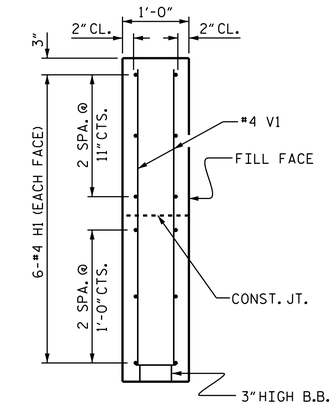

SECTION X-X

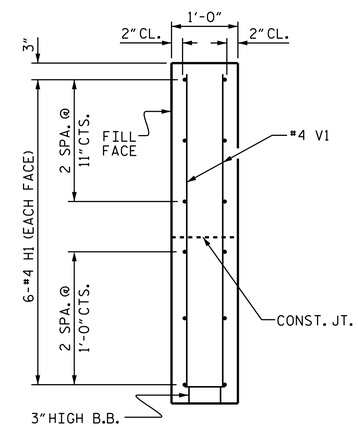

SECTION Y-Y

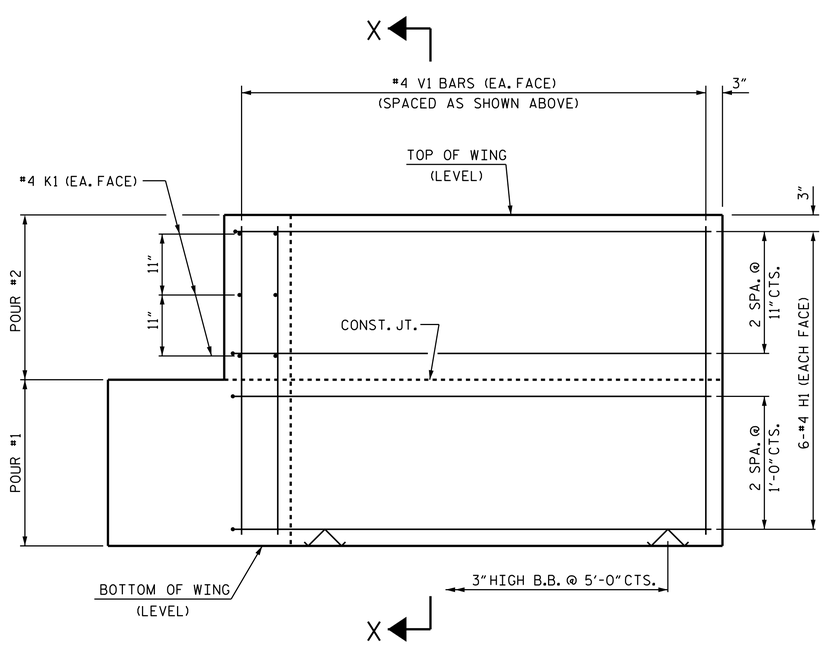

ELEVATION OF WING (W1)

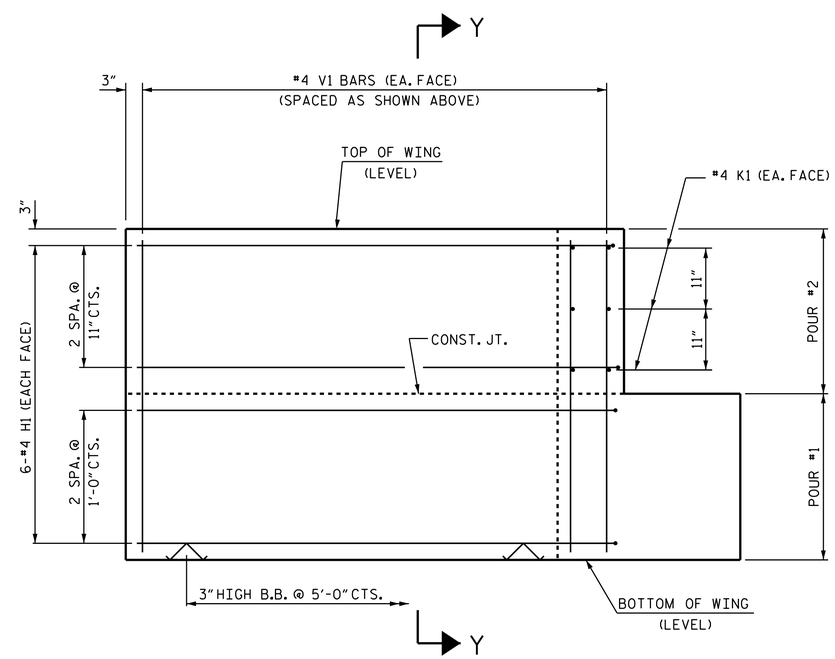

ELEVATION OF WING (W2)

WING DETAILS

PROJECT NO. 17BP.1.R.98

HERTFORD COUNTY

STATION: 14+65.00 -L-

SHEET 3 OF 4

STATE OF NORTH CAROLINA
DEPARTMENT OF TRANSPORTATION
RALEIGH

SUBSTRUCTURE

END BENT
WING DETAILS

NORTH CAROLINA PROFESSIONAL SEAL 036548 ENGINEER DANIEL R. BURGUNDY

Daniel R Burgundy
11/8/2021

ASSEMBLED BY : CAB	DATE : 7/21		
CHECKED BY : FAQ	DATE : 7/21		
DRAWN BY : DGE 02/10	REV. 4/15	MAA/TMG	
CHECKED BY : MKT 02/10			

DOCUMENT NOT CONSIDERED FINAL UNLESS ALL SIGNATURES COMPLETED

REVISIONS						SHEET NO.
NO.	BY:	DATE:	NO.	BY:	DATE:	S-10
1			3			TOTAL SHEETS
2			4			13

STD. NO. EB_30_90S