DocuSign Envelope ID: 980ECE15-E75D-4CEB-A9E0-2F70BBD1F7F1

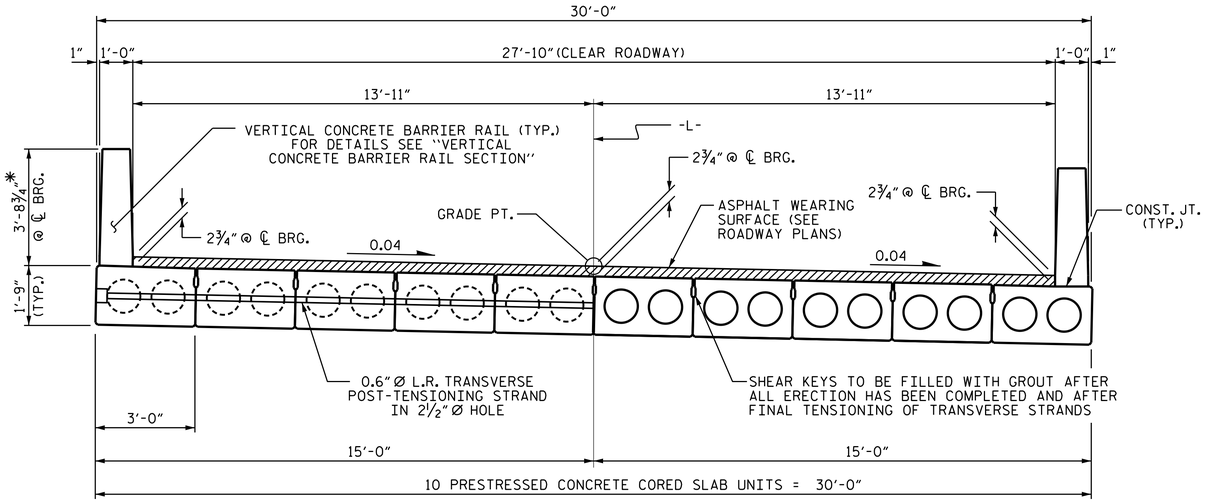

HALF SECTION AT INTERMEDIATE DIAPHRAGMS — HALF SECTION THROUGH VOIDS

TYPICAL SECTION

* - THE MAXIMUM BARRIER RAIL HEIGHT AND ASPHALT THICKNESS IS SHOWN. THE HEIGHT OF THE BARRIER RAIL AND ASPHALT THICKNESS VARIES WHILE THE TOP OF THE BARRIER RAIL FOLLOWS THE PROFILE OF THE GUTTERLINE. FOR RAIL HEIGHT DETAILS AND ASPHALT THICKNESS SEE THE "VERTICAL CONCRETE BARRIER RAIL SECTION" DETAIL.

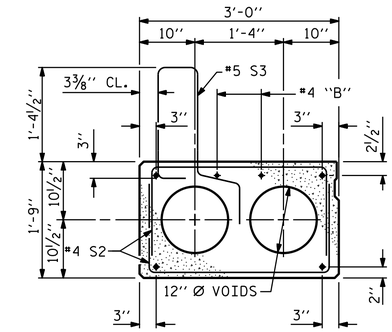

EXT. SLAB SECTION

(FOR PRESTRESSED STRAND LAYOUT, SEE INTERIOR SLAB SECTION.)

▲ BOND SHALL BE BROKEN ON THESE STRANDS FOR A DISTANCE OF 6'-0" FROM END OF CORED SLAB UNIT. SEE STANDARD SPECIFICATIONS, ARTICLE 1078-7.

DEBONDING LEGEND

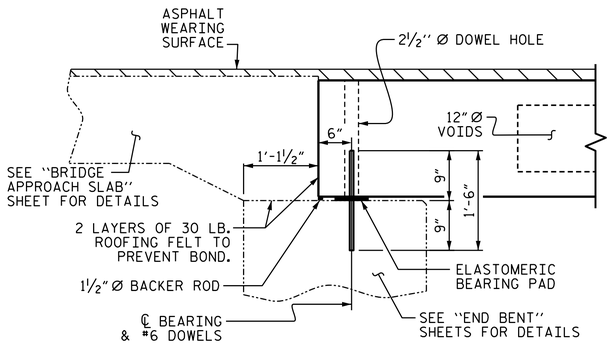

SECTION AT END BENT

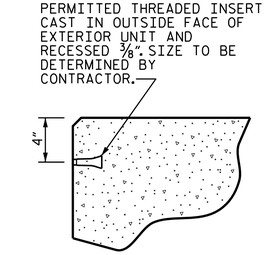

THREADED INSERT DETAIL

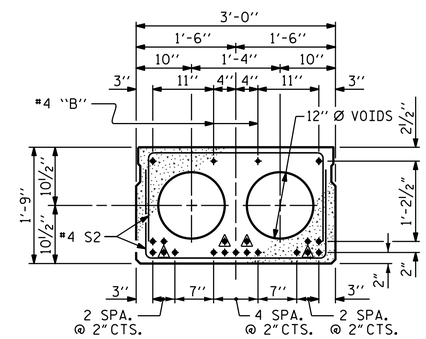

INTERIOR SLAB SECTION (50' UNIT)

(19 STRANDS REQUIRED)

0.6" Ø LOW RELAXATION STRAND LAYOUT

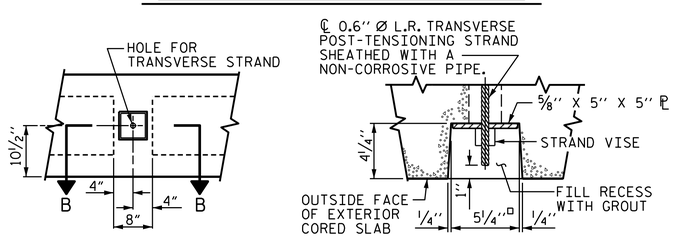

ELEVATION VIEW — SECTION B-B

GROUTED RECESS AT END OF POST-TENSIONED STRAND OF CORED SLABS

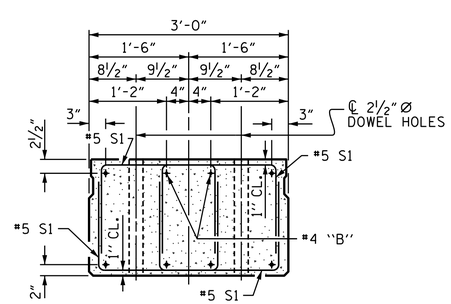

END ELEVATION

SHOWING PLACEMENT OF DOUBLE STIRRUPS AND LOCATION OF DOWEL HOLES. (STRAND LAYOUT NOT SHOWN.) INTERIOR SLAB UNIT SHOWN-EXTERIOR SLAB UNIT SIMILAR EXCEPT SHEAR KEY LOCATION.

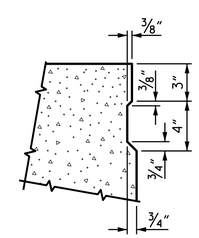

SHEAR KEY DETAIL

NOTE: OMIT SHEAR KEY ON OUTSIDE FACE OF EXTERIOR CORED SLABS.

PROJECT NO. 17BP.1.R.98

HERTFORD COUNTY

STATION: 14+65.00 -L-

SHEET 1 OF 3

STATE OF NORTH CAROLINA
DEPARTMENT OF TRANSPORTATION
RALEIGH

STANDARD

3'-0" X 1'-9" PRESTRESSED CONCRETE CORED SLAB UNIT 90° SKEW

NORTH CAROLINA PROFESSIONAL SEAL 036548 ENGINEER DANIEL R. BURGUNDY

Daniel R Burgundy 12/8/2021

ASSEMBLED BY :	CAB	DATE :	7/21
CHECKED BY :	FAQ	DATE :	7/21
DRAWN BY :	DGE	5/09	
CHECKED BY :	BCH	6/09	

DOCUMENT NOT CONSIDERED FINAL UNLESS ALL SIGNATURES COMPLETED

REVISIONS							SHEET NO.
NO.	BY:	DATE:	NO.	BY:	DATE:		S-4
1			3				TOTAL SHEETS
2			4				13

STD. NO. 21"PCS2_30_90S