DocuSign Envelope ID: 980ECE15-E75D-4CEB-A9E0-2F70BBD1F7F1

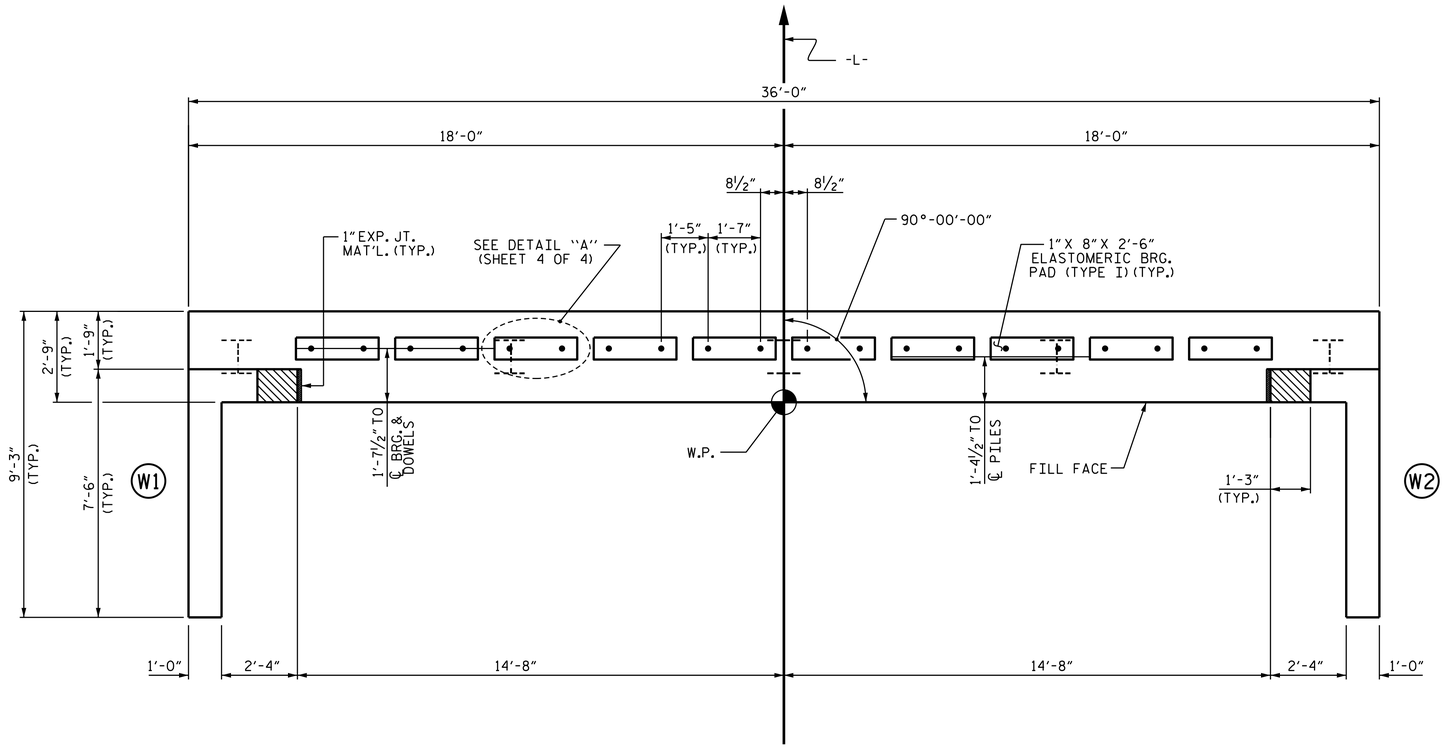

PLAN

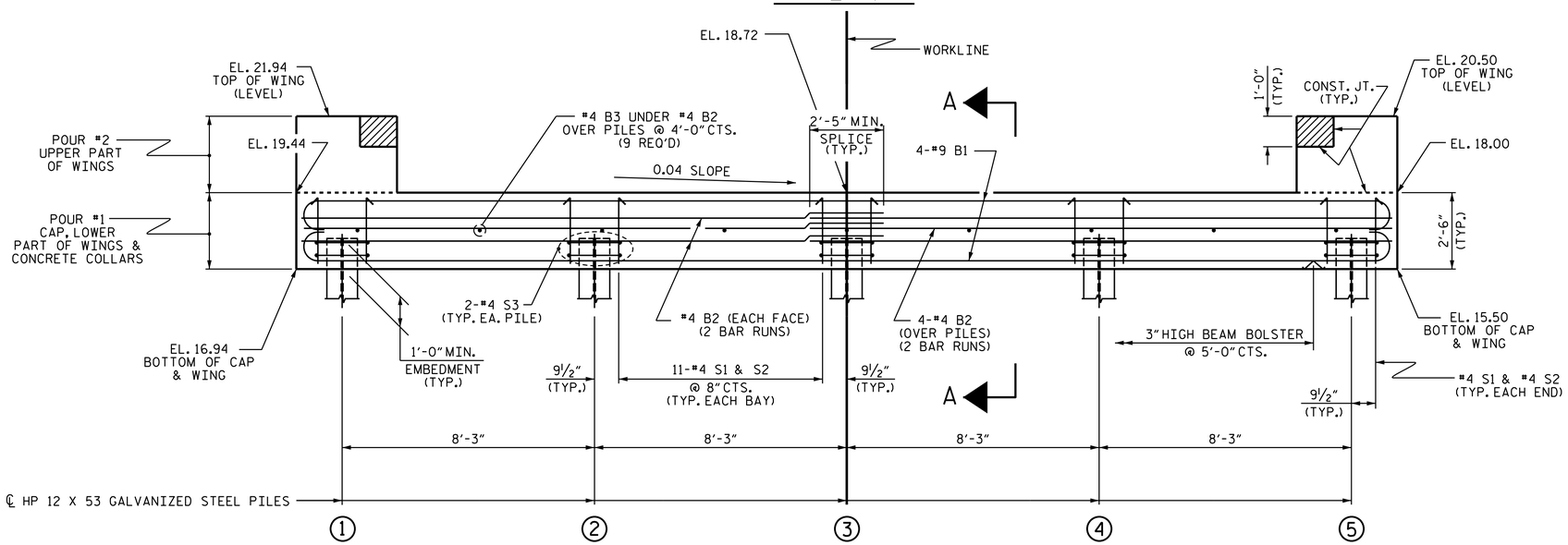

ELEVATION

WINGS NOT SHOWN FOR CLARITY.
FOR SECTION A-A, SEE SHEET 4 OF 4.
CONCRETE COLLARS FOR STEEL PILES NOT SHOWN IN PLAN AND ELEVATION VIEWS FOR CLARITY.
SEE "CORROSION PROTECTION FOR GALVANIZED STEEL PILES DETAIL", SHEET 4 OF 4.

NOTES

STIRRUPS IN CAP MAY BE SHIFTED AS NECESSARY TO CLEAR DOWELS.

THE CONCRETE IN THE SHADED AREA OF THE WING SHALL BE POURED AFTER THE VERTICAL CONCRETE BARRIER RAIL IS CAST IF SLIP FORMING IS USED.

GALVANIZE THE FULL LENGTH OF EACH PILE IN ACCORDANCE WITH SECTION 1076 OF THE STANDARD SPECIFICATIONS.

FOR PILE SPLICE DETAILS, SEE SHEET 4 OF 4.

FOR WING DETAILS, SEE SHEET 3 OF 4.

TOP OF PILE ELEVATIONS	
1	17.88
2	17.55
3	17.22
4	16.89
5	16.56

PROJECT NO. 17BP.1.R.98
HERTFORD COUNTY
STATION: 14+65.00 -L-

SHEET 1 OF 4

STATE OF NORTH CAROLINA
DEPARTMENT OF TRANSPORTATION
RALEIGH

SUBSTRUCTURE

END BENT No. 1

NORTH CAROLINA PROFESSIONAL SEAL 036548 ENGINEER DANIEL R. BURGUDY
DocuSigned by: Daniel R. Burgundy 14D9C9A8E5C4D... 11/8/2021

DOCUMENT NOT CONSIDERED FINAL UNLESS ALL SIGNATURES COMPLETED

REVISIONS						
NO.	BY:	DATE:	NO.	BY:	DATE:	
1			3			
2			4			

SHEET NO. S-8
TOTAL SHEETS 13

ASSEMBLED BY : CAB	DATE : 7/21	
CHECKED BY : FAO	DATE : 7/21	
DRAWN BY : DGE 01/10	REV. 4/15	MAA/TMG
CHECKED BY : MKT 01/10		

STD. NO. EB_30_90S