DocuSign Envelope ID: 980ECE15-E75D-4CEB-A9E0-2F70BBD1F7F1

NOTES :

FOR BERM WIDTH DIMENSIONS, SEE GENERAL DRAWING.

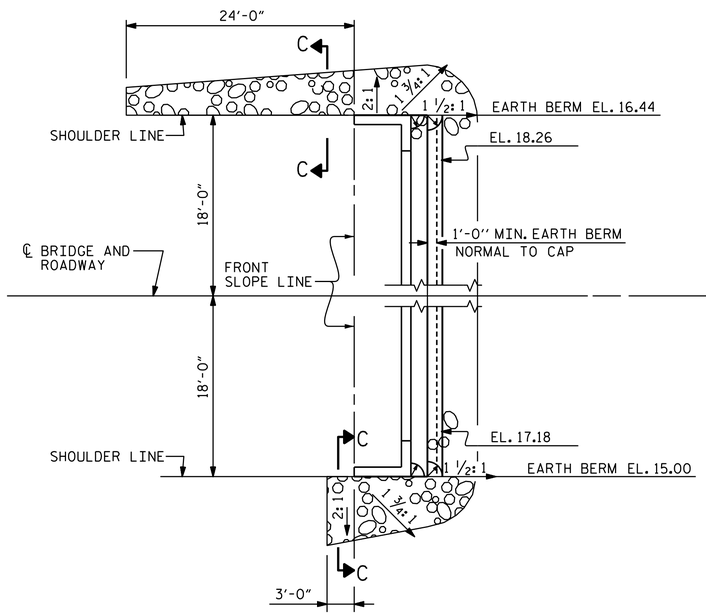

SHOULDER RIP RAP IS HIGHER THAN BERM RIP RAP

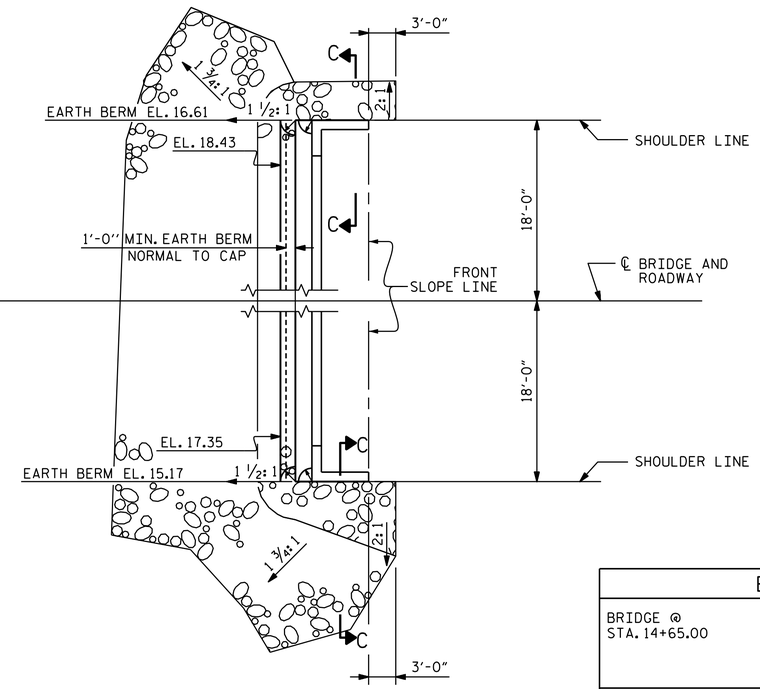

BERM RIP RAPPED

ESTIMATED QUANTITIES		
BRIDGE @ STA. 14+65.00	RIP RAP CLASS II (2'-0" THICK)	GEOTEXTILE FOR DRAINAGE
	TONS	SQUARE YARDS
END BENT 1	45	50
END BENT 2	127	141

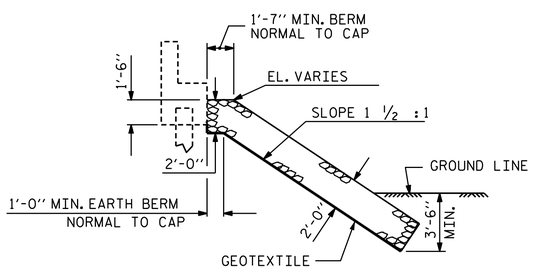

℄ SECTION

BERM RIP RAPPED

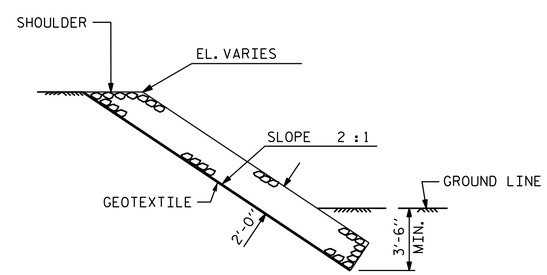

SECTION C-C

PROJECT NO. 17BP.1.R.98

HERTFORD COUNTY

STATION: 14+65.00 -L-

STATE OF NORTH CAROLINA
DEPARTMENT OF TRANSPORTATION
RALEIGH

STANDARD

RIP RAP DETAILS

NORTH CAROLINA PROFESSIONAL SEAL 036548 ENGINEER DANIEL R. BURGUNDY

Daniel R Burgundy
11/8/2021

ASSEMBLED BY : CAB	DATE : 7/21
CHECKED BY : FAO	DATE : 7/21
DRAWN BY : REK 1/84	REV. 10/1/11 MAA/GM
CHECKED BY : RDU 1/84	REV. 12/21/11 MAA/GM
	REV. 12/17 MAA/THC

DOCUMENT NOT CONSIDERED FINAL UNLESS ALL SIGNATURES COMPLETED

REVISIONS						
NO.	BY:	DATE:	NO.	BY:	DATE:	
1			3			
2			4			

SHEET NO. S-12

TOTAL SHEETS 13

STD. NO. RR1