PROJECT REFERENCE NO.	SHEET NO.
17.BP.1.R.98	EC-2A
R/W SHEET NO.	
ROADWAY DESIGN ENGINEER	HYDRAULICS ENGINEER

TEMPORARY ROCK SILT CHECK TYPE 'A' WITH MATTING AND POLYACRYLAMIDE (PAM)

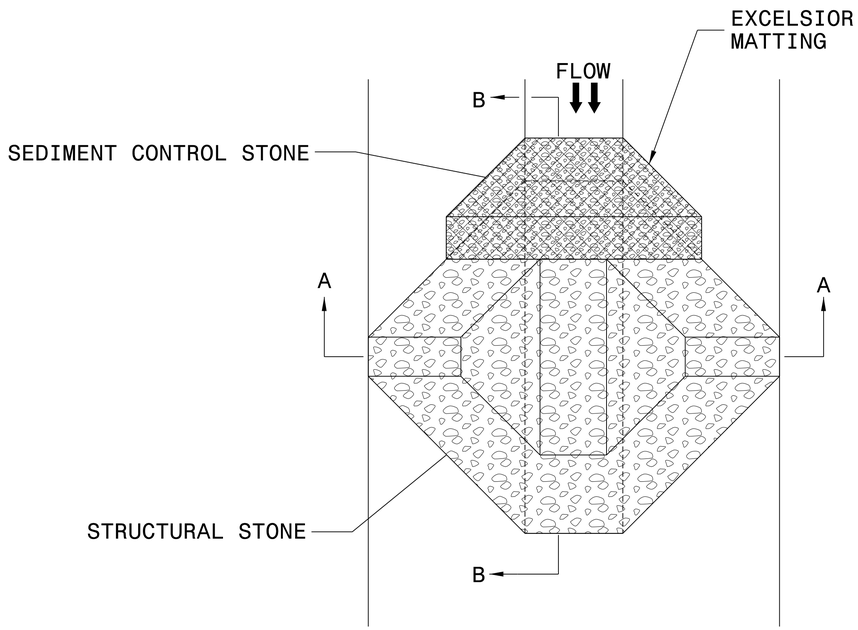

PLAN

NOTES:

INSTALL TEMPORARY ROCK SILT CHECK TYPE A IN ACCORDANCE WITH ROADWAY STANDARD DRAWING NO. 1633.01.

USE EXCELSIOR OR COIR FIBER* FOR MATTING MATERIAL AND ANCHOR MATTING SECTION AT TOP AND BOTTOM WITH CLASS B STONE.

PRIOR TO POLYACRYLAMIDE (PAM) APPLICATION, OBTAIN A SOIL SAMPLE FROM PROJECT LOCATION, AND FROM OFFSITE MATERIAL, AND ANALYZE FOR APPROPRIATE PAM FLOCCULANT TO BE APPLIED TO EACH ROCK SILT CHECK.

INITIALLY APPLY 4 OUNCES OF POLYACRYLAMIDE (PAM) TO TOP OF MATTING SECTION AND AFTER EVERY RAINFALL EVENT THAT EQUALS OR EXCEEDS 0.50 INCHES.

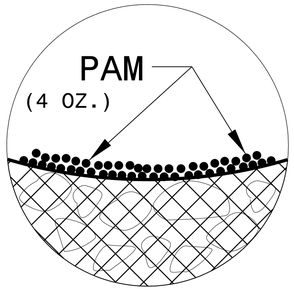

INSET A

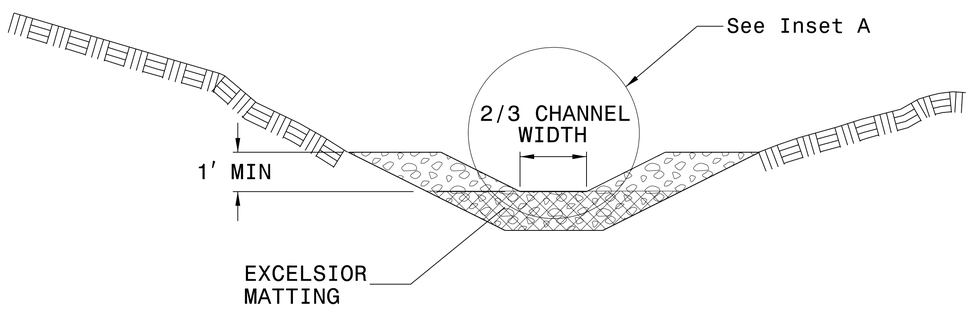

SECTION A-A

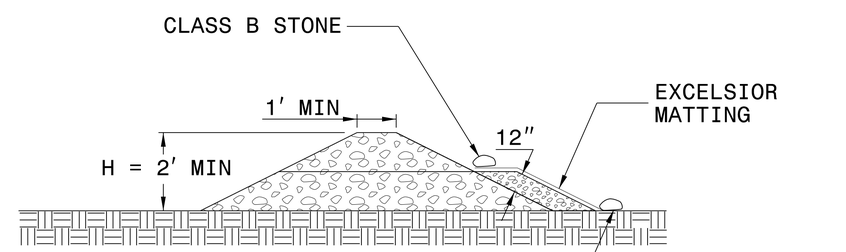

SECTION B-B

*EXCELSIOR MATTING IS NOT ALLOWED WITHIN 25' OF TOP OF STREAMBANK. USE COIR FIBER MATTING IN THESE AREAS.

NOT TO SCALE